OPERATING INSTRUCTIONS

ELECTRONIC CONTROLS

FRECH
STATAMAT

From July 1979
with digital times
on quartz frequency
basis

Table of Contents

OUR ELECTRONIC CONTROLS

- are "Tailor made" and contain only that which is necessary for function without any un-necessary ballast. Which means that the costs can be reduced.
- are constructed using standard components.
- are designed for ease of operating. Clear - un-complicated - logical.
- are optimally protected against interference.
- are so designed that the circuits have ample power reserves.

1. General Information

The control circuits are contained on plug-in boards that have the Europa size of 1oo x 16o mm.
Each plug-in board is supplied via a 31 contact socket (as per DIN 41 617) in an assembly.
The assembly is wired on the rear side and is accessible from the front and rear.

The control circuit logic is based on integrated circuits (IC's) of the type LSL Series Type FZ 1oo from Siemens.

LSL = Slow interference-free logic

Integrated Circuit Specifications:

Operating voltage typical	15	V=
Operating voltage minimum	13.5	V=
Operating voltage maximum	17	V=
Operating temperature	0 ... 7o°C	
Storage temperature	-65 ...15o°C	
Statistic interference suppression		
a) for a Lo signal	V = typical 5.OV	
b) for a Hi signal	V = typical 8.OV	

2. Types of Printed Circuit Boards

2.1 Power Supply Board VP

The board provides the stabilised voltage of 15 V.d.c for the whole logic network. Voltage fluctuations as a result of either changing loads of mains disturbances are automatically regulated. The power supply board is short circuit protected, over-voltage protected and can not be over-loaded. The output current can not exceed the predetermined maximum value (approx. 2.7A). In the event of the current raising above this level, as the result of a short circuit or over-load, the voltage breakes down (fold-back characteristic). A short circuit current of approximately 2oo mA will flow. Following rectification of the external fault, the plug-in board is ready for immediate operation when it has been switched off for a brief period.

The VP board also provides the reset pulse when switching on, thus ensuring that the flip-flops (e.G. Timing board) are set to the starting position.

Block Diagram:

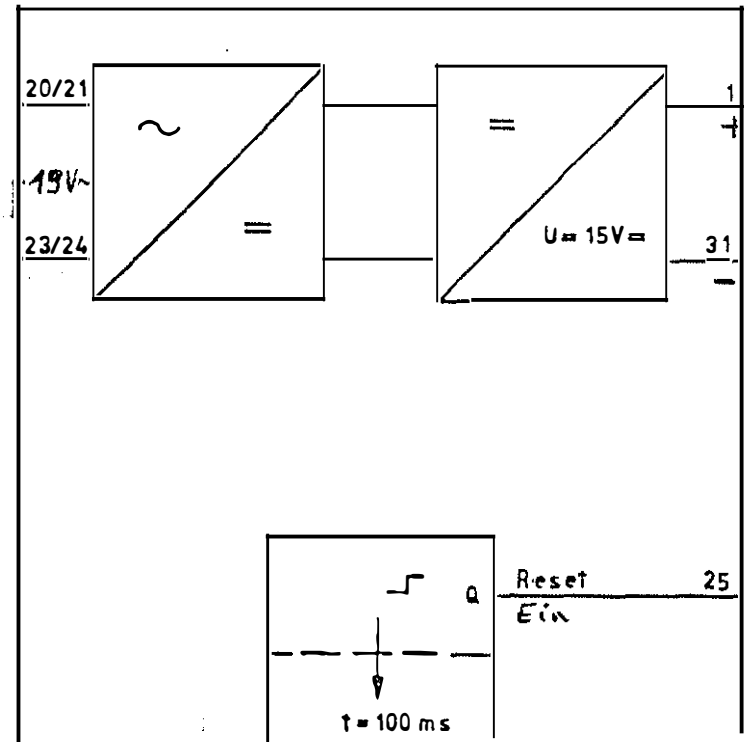

2.2 Power Supply Board DVP

All functions and connections of this circuit board are the same as on circuit board VP (see 2.1) however, it is fitted with an additional timing generator with quartz frequency, clock frequency at pin 26 1 hz, at pin 27 10 hz. The digital timers are set with this clock frequency (dzs see 2.7)

Block diagram:

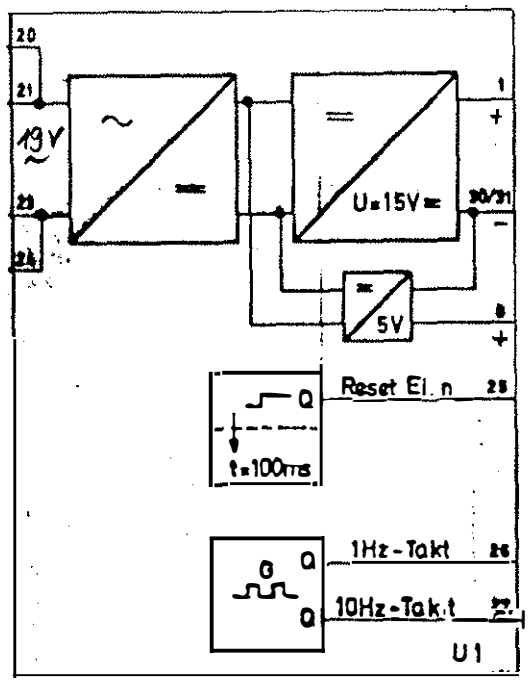

2.3 Input Board EP

The input board acts as a buffer to the input signals. The signals from the operative elements which are external to the control unit (limit switches, selector switches and detectors etc.) are applied to the control circuits via the input board. By virtue of special input configurations for each input signal, the noise signal on the input, be it either positive or negative, is suppressed before it reaches the input of the electronic control circuit. In addition to which, each input is loaded with a 2.7 k load in order that the appropriate input be reduced to zero volts in the event of the input conductor being disconnected or broken so that false connections can be avoided.

Furthermore, there is an IC with two EXCLUSIVE - OR configurations located on the input board. This device enables two concurrent signals to monitor eachother.

Block Diagram:

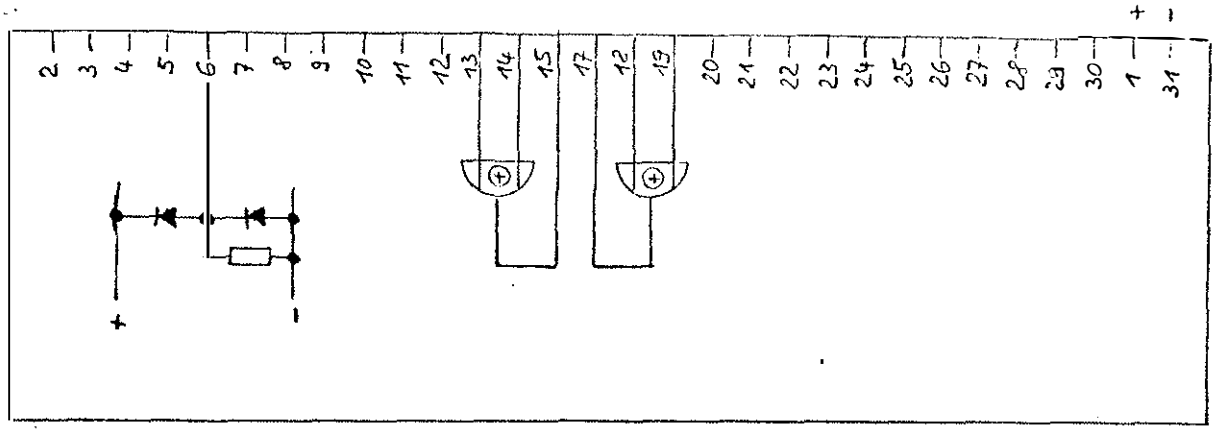

2.4. Function Board FP

This board has 2 outputs with high current rating (max. 3 - 4 A) that can be used for driving magnetic valves for example. Each output stage is driven by 1 IC. This IC has a wide range of AND/OR combinations and facilitates extension of the AND/OR combination by means of external wiring. The FP also has 4 logic outputs.

Several inputs are changed from Hi potential to Lo potential (approx. 1V) by means of a resistor to ground. This facilitates an OR configuration to be made on these inputs and prevents an un-controlled switching of the output stage. In the circuit diagram, these inputs are identified by means of an arrow in the conductor (—▶—).

The open inputs of the IC can be used to form an AND configuration by means of using diodes (see also para. 4.8).

Block Diagram:

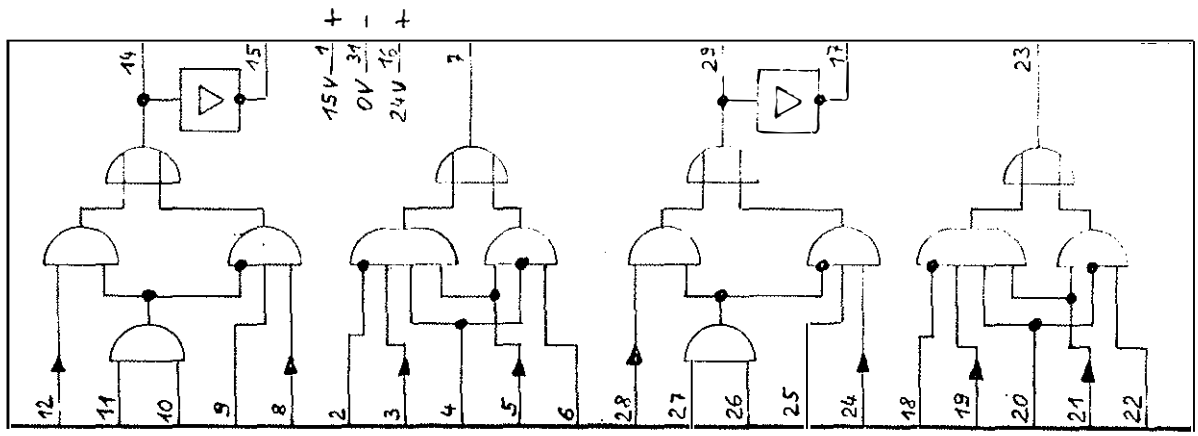

2.5 Nand Board NP

This board contains 2 IC's with a total of 4 NAND and 4 NOT gates. These NAND or NOT gates are used to simplify the logic circuitry. In parallel with the NOT gate outputs are 4 inverting amplifiers (low power).

Block Diagram:

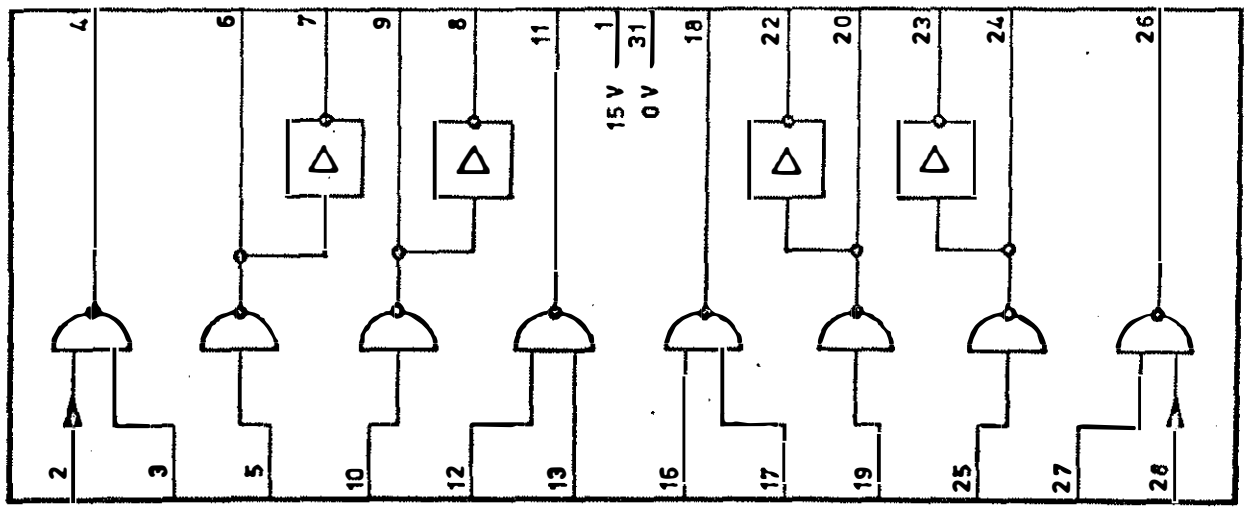

2.6 Timing Board ZP for analogous time preselection

The timing board has 2 monostable flip-flops each with two outputs:

a) Time running

b) Time expired

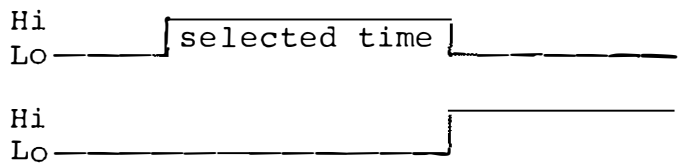

The timing range is determined by the value of the potentiometer that is selected.
That is to say: 50 kΩ ≙ 1s.
Delay periods of up to 1000 seconds are possible.

Each flip-flop has 2 start inputs and 4 re-set inputs, one of which can be extended. During the period of "Time running",all connected start and hold conditions must be in the Hi state. The "Time expired" output has a Hi state signal for as long as <u>all</u> connected hold conditions are in the Hi state.

Block Diagram

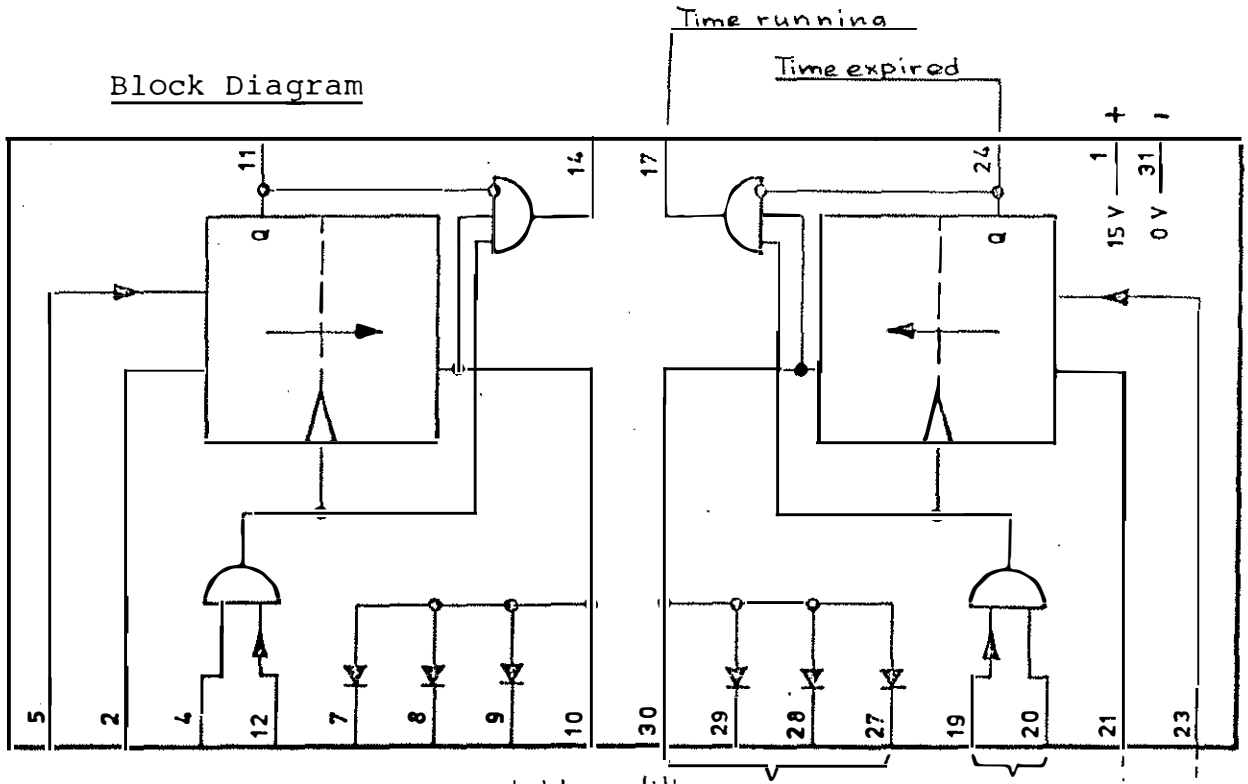

2.7 Timing Board DZP and Time Stage DZS for digital time preselection

The control of board DZP is the same as of board ZP. On the DZS are 3 timers. The time is set at a 2-figure digital preselector switch. Numbers on black stripes = seconds - numbers on red stripes = deciseconds.

Function

If the time is started and signal "time runs" is set, the counter on theDZS counts the clocks of pin 4 until they correspond with the number set at the digital preselector. Consequently output 3 of DZS becomes 0-signal and by this the start-stop-logic of DZP switches signal L on output "time elapsed".

Change of maximum adjustable time:

a) to obtain range 0-99 seconds connect pin 4 of DZS at 1 hz (from u1/26 (see 2.2)

b) to obtain range 0-9,9 seconds connect pin 4 of DZS at 10 hz (from u1/27 (see 2.2)

Block diagram

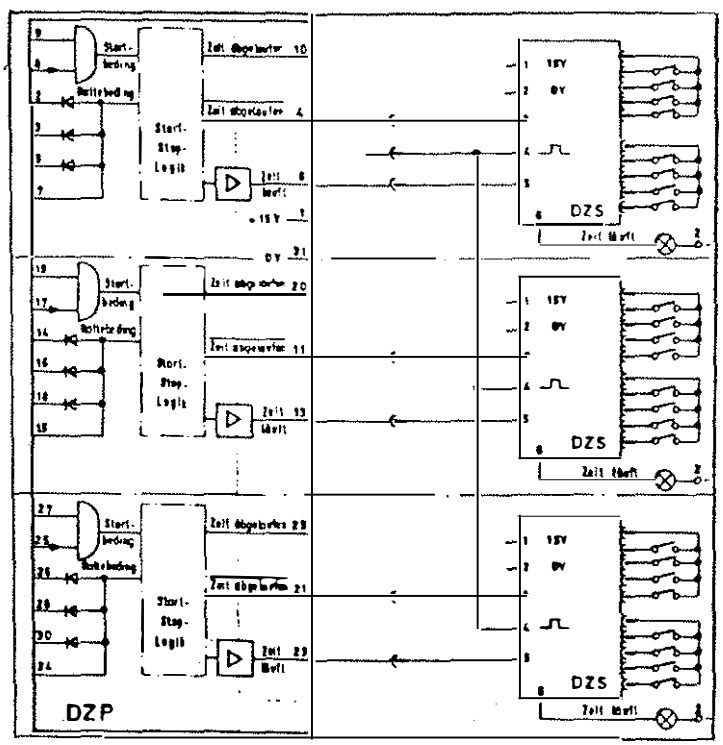

Circuit Diagrams

2. 8 Diode Board DIP

The diode board contains:

3 pairs of diodes with common cathodes
2 x 3 diodes with common cathodes
2 x 2 diodes with common anodes
1 x 3 diodes with common anodes
2 single diodes

The diodes and diode groups on the DIP are used to extend the AND and OR gate input that are located on the FP, NP and ZP plug-in boards.

Each diode has a maximum reverse voltage of 4oo V.

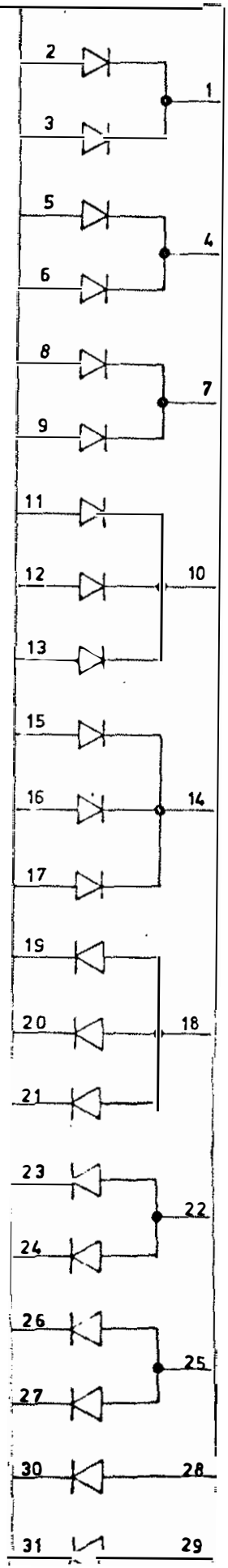

2.9 Spray Counter and Cycle indicator display board AZP

Electronic card AZP contains 2 counters.

1. Spray counter: this counter has a start and clock input. By means of a flat plug-in cable a digital preselector switch is connected. As soon as the preselected number of impulses is reached, 1-signal at output 5 is set until start input is interrupted. Counter is reset to 0.

2. Cycle time counter: this counter has a start and clock input. Clock input is connected to a 10 hz clock of board DVP/u1/27) by means of a flat plug-in cable a seven segment display with pushbutton and optional preselector is connected.

   Function of cycle display key: cycle indication runs down in automatic mode and preselection (repeat) during machine cycle, resets for a new start and starts counting again. If the key below cycle indication is pressed, maximum value of cycle time is indicated until key is released.

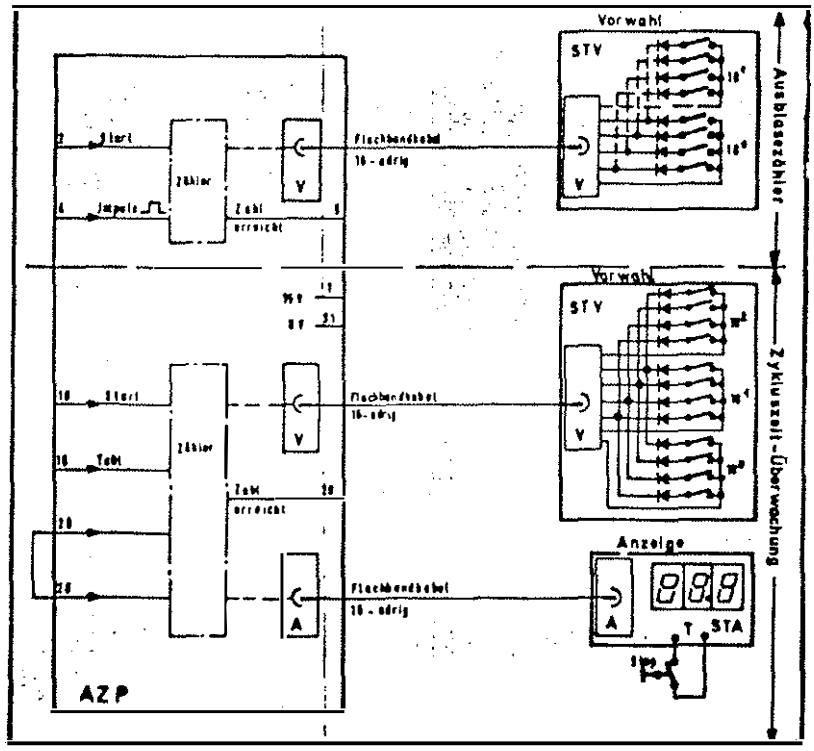

2.10 Preselector counter time board VZP

Board VZP has 2 equal, independent counter timers with possibility of display and output impulse. By means of flat plug-in cables the digital preselectors and the displays are connected. If start input gets 1-signal, the counter counts the impulses at input 5 resp. 20. If coincidence with the preselected number is reached output "output equal" gets 1-signal until start input is interrupted. Counter resets to 0.

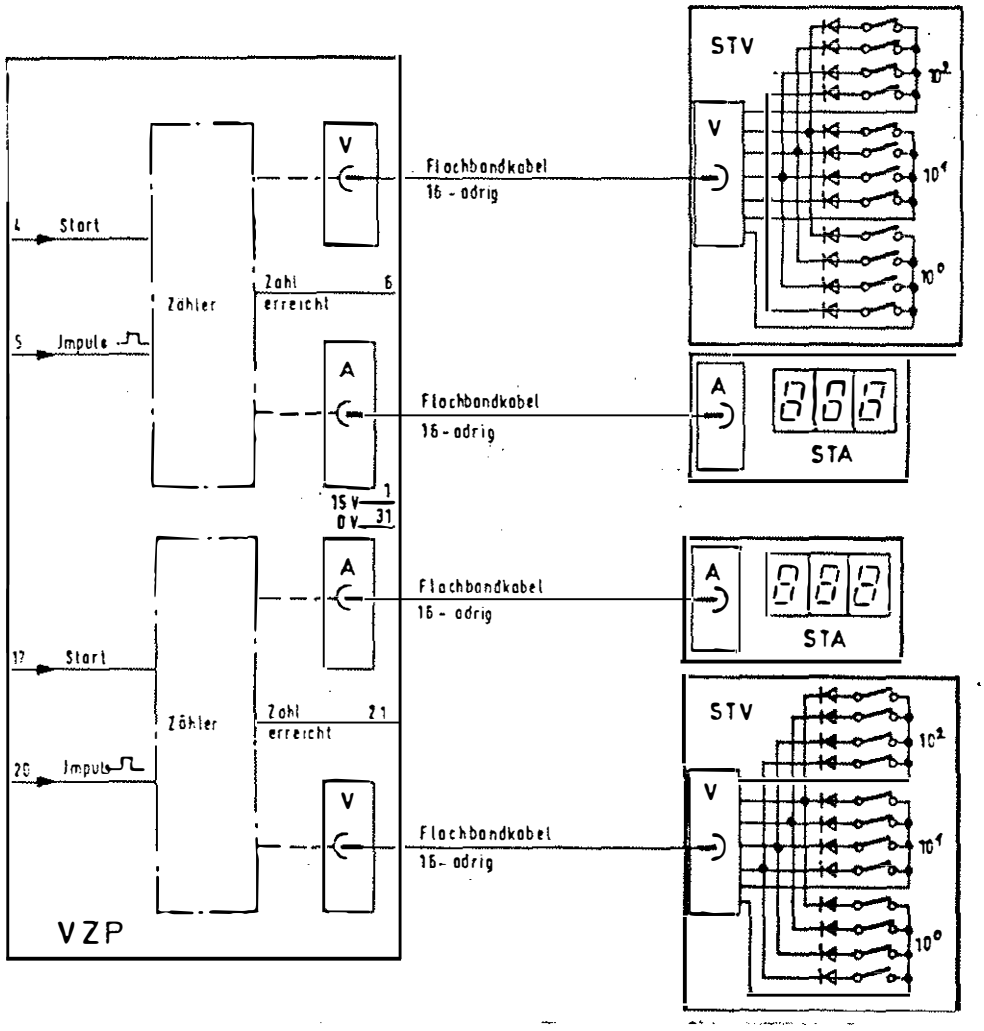

3. Voltage Level Specifications

3.1 Voltage levels in the control unit (logic voltages)

The control circuits are supplied with a 15V stabilised and smoothed voltage from the power supply board PS.

The logic inputs and outputs have the following voltage potentials:

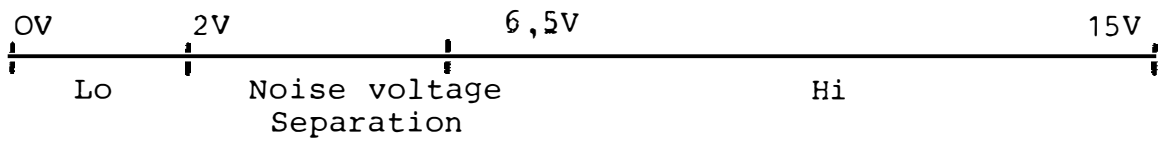

As can be seen from the illustration above:

1. a logic voltage of from 0 to 2 volts is equal to a Lo state.
2. that a voltage between 2 and 6.5 volts does not occur (Noise voltage separation = safety margin between Lo and Hi levels).
3. that a voltage between 6.5 and 15V is equal to a Hi state.

3.2 Valve operating voltage

All hydraulic and pneumatic valves have an operating voltage of 24Vd.c.

4. Circuit Diagram Information

4.1 AND Function

Circuit Diagram

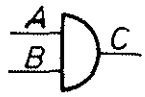

Truth Table

A	B	C
Lo	Lo	Lo
Hi	Lo	Lo
Lo	Hi	Lo
Hi	Hi	Hi

In order to obtain a voltage from output C, the inputs A and B must both have a Hi level applied to them.
If input A or B or A and B do not have a voltage applied to them (Lo state) then output C is also in the Lo state.

4.2 OR Function

Circuit Diagram

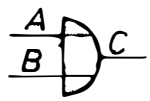

Truth Table

A	B	C
Lo	Lo	Lo
Hi	Lo	Hi
Lo	Hi	Hi
Hi	Hi	Hi

In order to obtain a voltage from output C, either the input A or B must have a voltage applied to them.
If a voltage is applied to both A and B inputs, then the output C also has a voltage output.
If neither input A nor B have a voltage applied to them, then output C is in the Lo state.

4.3 NAND Function

Circuit Diagram

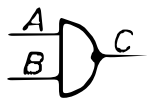

Truth Table

A	B	C
Lo	Lo	Hi
Hi	Lo	Hi
Lo	Hi	Hi
Hi	Hi	Lo

Output C is in the Lo state when a voltage is applied to inputs A and B.
In all other cases, output C is in the Hi state.

4.4 AND Function with a negated input

Circuit Diagram

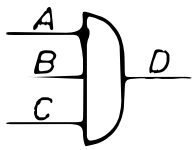

The dot on input A indicates the negated (inverting) input.

Truth Table

A	B	C	D
Lo	Lo	Lo	Lo
Lo	Lo	Hi	Lo
Lo	Hi	Lo	Lo
Hi	Lo	Hi	Lo
Hi	Hi	Lo	Lo
Lo	Hi	Hi	Hi
Hi	Hi	Hi	Lo

In order to obtain a voltage from output D, input A must be in the Lo state, input B in the Hi state and input C in the Hi state.
In all other cases, output D is in the Lo state.

4.5 EXCLUSIVE - OR Function

Circuit Diagram

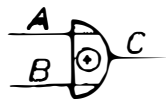

Truth Table

A	B	C
Lo	Lo	Lo
Hi	Lo	Hi
Lo	Hi	Hi
Hi	Hi	Lo

The potential on output C is Hi when the potentials applied to inputs A and B are unequal.

4.6 Output amplifier with inverted output signal

4.6.1 There are two output amplifiers located on the function board FP for driving such things as 24V valves or auxilliary circuits etc.

Part of the FP:

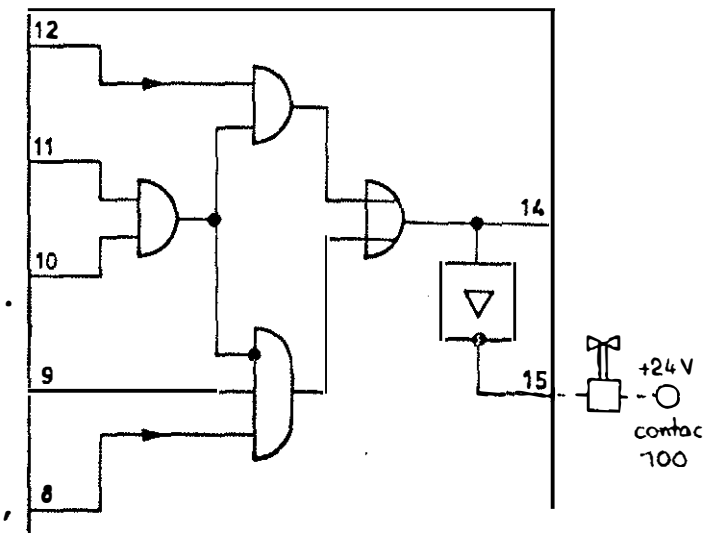

The non-amplified logic signal (Lo or Hi) from the IC is available on output 14. The appropriate regulator device is connected to output 15.

If the logic output 14 is Hi, the built-in amplifier stage switches to ground potential and thus the output 15 is in the Lo state which causes the regulator device (e.g. a valve) to operate. If, on the other hand, the logic output 14 is in the Lo state, then the built-in amplifier isolates the ground connection, the potential at output 15 raises to 24V (from contact 100 via the valve coil).

4.6.2 There are four output amplifiers on the Nand board NP that can be used for driving low power devices such as signal lamps or for ampification of the logic signals.

Part of the NP:

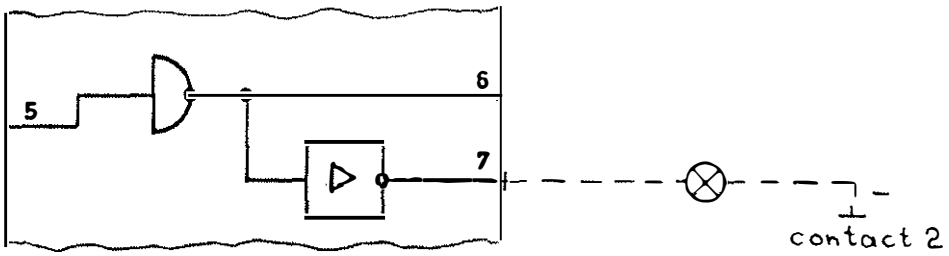

Truth Table

5	6	7
Lo	Hi	Lo
Hi	Lo	Hi

The signal at output 6 is always the inverse of the signal applied to input 5. Conversely, the signal at output 7 is of the same logic state as input 5 but it has been amplified.

4.7 Logic input configurations on the plug-in board

Each unused input to the IC is in the Hi state, that is if it is not already connected to ground (0 potential) via a resistance.
The connections via a resistance to ground are indicated in the circuit schematic diagram by means of an arrow in the conductor.

Example:

The diagram below shows part of the function board FP where inputs 3 and 5 are connected to ground via a resistance.

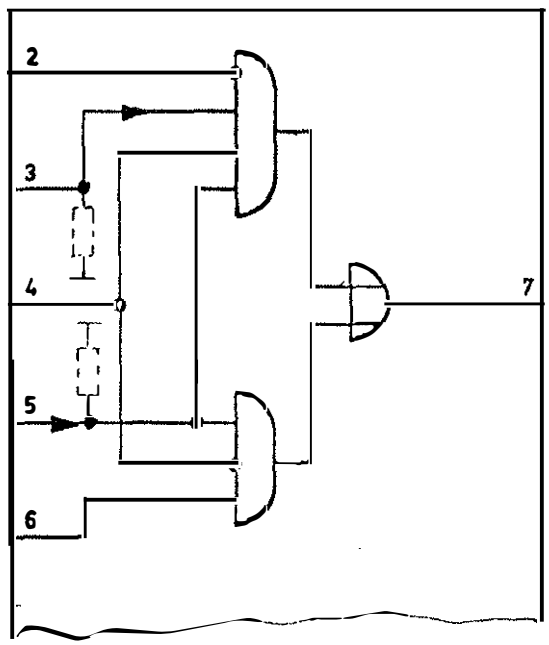

4.8 Extending the logic inputs by means of externally connected diodes.

Example

Part of the function board FP.

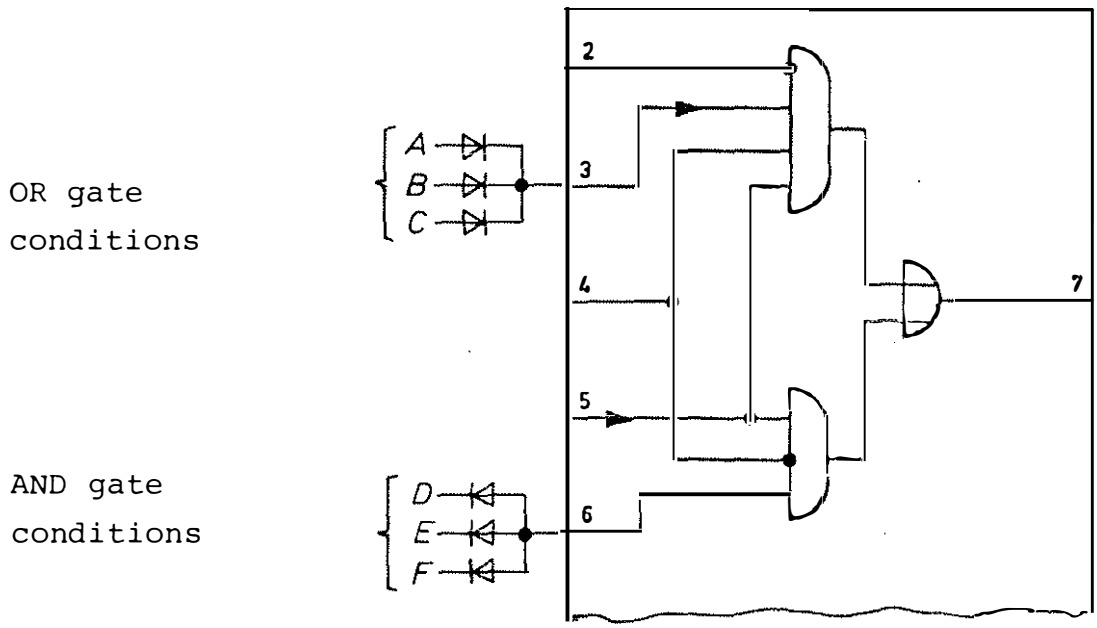

The inputs 2, 4 and 6 can be extended, by means of externally connected diodes, to include as many AND gates as required. Inputs 3 and 5 can be extended, by means of externally connected diodes, to include as many OR gates as required.

Explanation of the AND gate conditions:
In order to obtain a Hi state at input 6, a voltage must be applied to the diodes D and E and F.

Explanation of the OR gate conditions:
In order to obtain a Hi state at input 3, a potential must be applied to either diodes A or B or C.

5. Faults, Troubleshooting

If a fault occurs in the installation, first determine whether the cause of break-down is either an electrical or a hydraulic fault.
Due to the fact that each hydraulic valve and limit swith operation is indicated by a separate lamp on the instrument panel, these kind of faults are easily identified:

Red arrow signal lamp = Hydraulic valve
Round yellow signal lamp = Limit switch operation

5.1 Possible Faults

	Fault	Troubleshooting procedure
5.1.1	One action not operating (e.g. opening, closing, ejecting, core puller...)	a) Check all fuses b) Ensure that the position of the valves and limit switches correspond with the position of the machine as indicated by the control lamp on the instrument panel. c) Cable broken? d) Limit switches in order? e) Measure the valve operating voltage on the machine terminal block. f) Last of all, check the control unit (refer to paragraph 5.2)

Locating a short circuit

	Fault	Troubleshooting procedure
5.1.2	Short circuit in the valves	a) Turn the main switch off. b) Remove all outgoing conductors from contact No. 100 on the machine terminal block. c) Re-new the fuse d) Turn the main switch on e) Switch on the hydraulic motor, if no fuse is blown, then f) Re-connect the disconnected conductor to contact 100 until the short circui re-appears. The cause of the short circuit is either in the last cable to be connected or in the valve itself.

Clearance of ground fault

5.1.3

If the ground fault detector indicates a ground fault there can be

a) a connection between 0V and ground
b) a connection between + 15 V and ground
c) a connection between + 24 V and ground

When momentarily switching off and on the main switch you can see whether the ground fault has existed only for a short time (ground fault lamp extinguishes)

If indication persists after switching on, ground contact is still existing.

Fault	Trouble shooting
ground contact 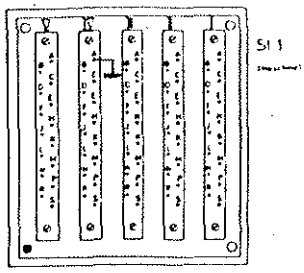	1) Switch off main switch. Disconnect machine plug 1 at the switch cabinet. Switch on. If ground fault is not longer indicated, ground fault must be at the machine. Remove jumper at terminal 1, 2 and 100 in the machine terminal. Check connection between ground (ST1 A4) and all other 74 pins at the disconnected plug 1 by means of ohmmeter. As soon as connection has been located you can trace the defective device from the connector assignment in the switch cabinet. 2) If ground fault is still existing, switch off main switch, connect again plug 1 and disconnect all plugs at the rack mount. Switch on. If ground fault is not longer indicated, ground fault must be in the rack mount. 3) If ground fault is still existing, switch off main switch again, connect the rack mount, disconnect all wires of terminal 1 in the switch cabinet, switch on, connect individually to see whether ground fault occurs. If necessary repeat the same with terminals 2 and 100. However, see to it that connection between 0V and ground fault detector must not be interrupted when disconnecting terminal 2.

5.2 Testing the electronic control unit

Only qualified electronic technicians or electricians should be permitted to test or make measurements on the electronic control unit.

In order to make such tests it is absolutely necessary that the workman can read a circuit diagram (refer to paragraph 4.1 to 4.8).

Use a voltmeter set to read 15 V d.c for measuring and checking the logic signals.
With reference to the information shown on the circuit schematic diagram, the input/output voltages can be measured on the plug-in board terminals that are located on the rear of the assemblies.

Ensure that only thin voltmeter probes are used in order to avoid bridging two contacts during a checking procedure.

The plug-in boards are to be removed or replaced only when the current has been turned off.

5.3 Plug-in adapter boards used for troubleshooting the electronic control unit.

5.3.1 Description of the plug-in boards AP 1 and AP 2

The set of adapter boards comprises 2 plug-in boards.

5.3.1.1 Adapter board AP 2

Dimensions 100 x 230 mm.

This plug-in board has 31 conductors along the length of the board. At one end it is fitted with a 31 contact edge connector and a 31 contact edge-contact socket at the other end. A further 31 contact socket is located near to the main socket for the purpose of receiving the indicator board AP 1.

5.3.1.2 Indicator board AP 1

Dimensions 90 x 160 mm.

This plug-in board is fitted with a 31 contact edge-contact socket, 29 LED's, 5 IC's and various resitors and diodes. The AP 1 is plugged into AP 2 for the purpose of indicating the input/output potentials on the FP, ZP, NP, EP plug-ins.

5.3.2 Measuring sequence

The plug-in which is to be tested is to be removed, with the current turned off, and replaced by this adapter board combination. The plug-in board is then inserted into the empty connector which protrudes from the assembly.

5.3.3 Function

The 29 LED's located on the indicator board simultaneously shows the voltage potentials for the individual inputs on the plug-in board:

Dark	=	OV (Lo potential)
Bright	=	Positive voltage (Hi potential) or input not connected and not connected to ground.

The number on the LED corresponds with the number of the contacts on the plug-in board. Without using additional measuring devices, the voltages at the input of the plug-in board can be read at a glance and compared with the logic diagram in the circuit schematic. An additional measuring device can, however, be used to test the plug-in board during active operation.

The adapter boards AP 1 and AP 2 are optional equipment which can be ordered as required.

OSKAR FRECH GmbH + Co. KG
Spritzgieß- und Druckgießmaschinen
Schorndorfer Str. 32
Postfach 1203
7060 Schorndorf 2

Telefon 07181/ 7921 Telex 7-246 609